Reg. No. | | | | | | | | | | |

[17ME32]

THIRD SEMESTER B.Tech EXAMINATION, DECEMBER–2018

SOLID MECHANICS

Time:3 Hours

Maximum Marks:70

Instructions:
i. Answer any **FIVE** full Questions choosing at least two from each part.
ii. Missing data may be suitably assumed.

PART - A

1. a. Elucidate the tensile test diagram (stress-strain diagram) for mild steel with salient points. 06

b. A member ABCD is subjected to axial loads P1, P2, P3, and P4 as shown in the Figure 1b. Calculate the force P2 necessary for equilibrium if P1=10kN, P3=40kN and P4=14kN. Taking E =2.05X10^5 N/mm^2, determine the total elongation of the member. 08

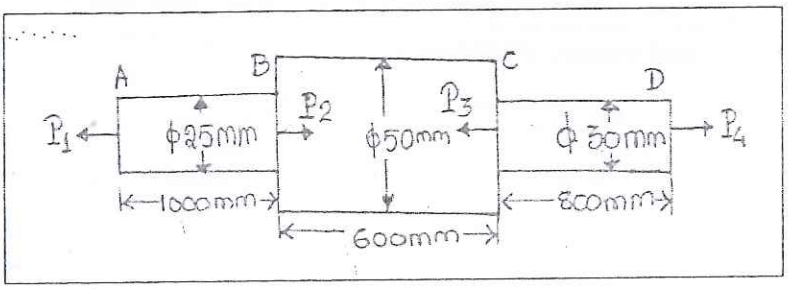

Figure 1(b)

2. a. Derive an expression for the extension of uniformly tapering circular bar subjected to axial load. 07

b. A reinforced concrete column 450X450mm has four steel rods of 25mm diameter embedded in it. Find the stresses in the steel and concrete when the total load on the column is 1000kN. Take E_s=205N/mm^2 and E_c=13.6N/mm^2 07

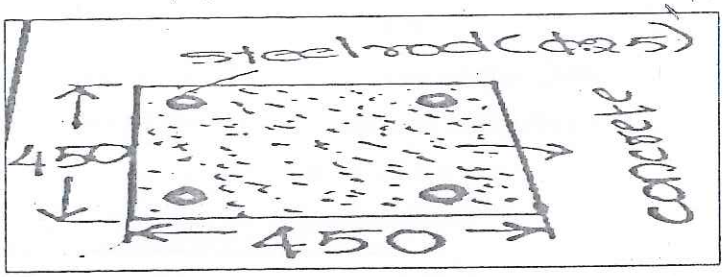

Figure 2b

3. a. With neat sketches explicate different types of loads. 04

b. Calculate the SFD and BMD for the beam as shown in the figure 3b. 10

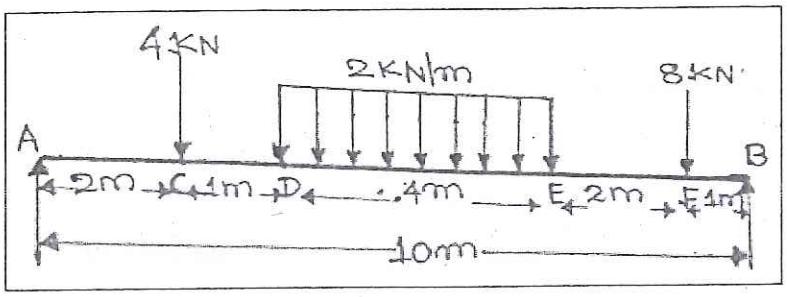

Figure 3b

4. A cast iron bracket subjected to bending has a cross-section of I-Shape with unequal flanges, as shown in figure 4. If the section is subjected to a shear force of 1600 kN. Draw the shear stress distribution over the depth of the section, indicating the principal values. All dimensions are in mm. 14

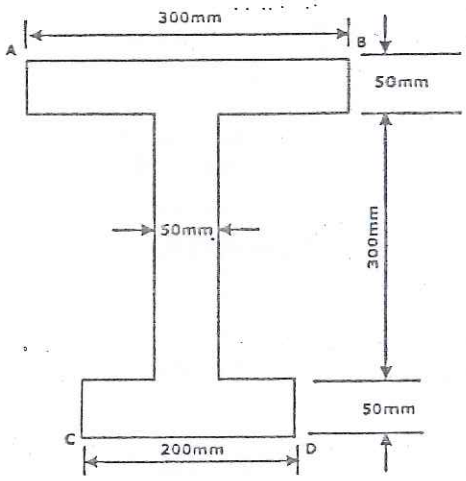

Figure 4

PART - B

5. An overhanging beam ABC, supported at "A" and "B" is loaded as shown in the figure 5. Determine the deflection at free end, and maximum deflection between "A" and "B". Take I=600 Cm^4 and $E=2X10^5$ N/mm^2. 14

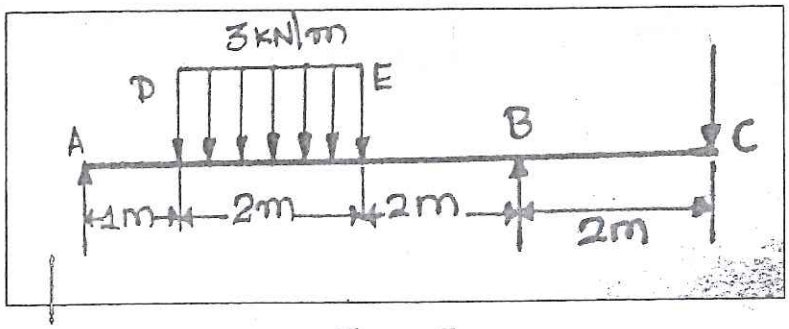

Figure 5

6. a. What are the assumptions in pure torsion? 07

b. A solid shaft is subjected to a torque of 12000 N-m. Find the necessary diameter of the shaft if the allowable shear stress is 60 N/mm^2 and the allowable twist is 1° for a length of 20 times the diameter of the shaft. Take $G = 0.8X10^5$ $N\backslash mm^2$. 07

7. a. Differentiate between principal stress and principal strain. 04

b. A piece of material is subjected to tensile stresses of $70N/mm^2$ and $30N/mm^2$ at right angles to each other as shown in figure 7b. Find the stresses on a plane, the normal of which makes an angle of 35^0 with $70N/mm^2$ stresses by using Mohr circle. 10

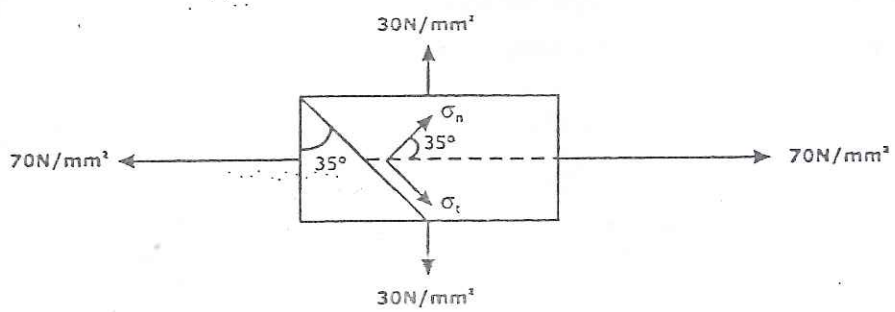

Figure 7b

8. a. Explain the following theories of failure 06

i. Maximum principal stress theory (or) Rankine's Theory

ii. Maximum shear stress theory (or) Guests Theory

b. Derive an expression for the column when one end of fixed and the other end is free. 08